## PROFESSIONAL
## FB 5 - 154564

| POS. No. | Ref.No. | Description |
|---|---|---|
| 1 | 360318 | Screw A-K 5x25 |
| 2 | 117246 | Cord with a plug |
| 3 | 206687 | Cord protector |
| 4 | 152044 | Gear box |
| 5 | 933756 | Bearing HK0709 |
| 6 | 152169 | Bearing bed |
| 7 | 112218 | Spindle |
| 8 | 112913 | Spacer washer |
| 9 | 112914 | Spacer washer |
| 10 | 112915 | Spacer washer |
| 11 | 114226 | Gear set |
| 12 | 115162 | Bush |
| 13 | 330334 | O-ring 22X2B |
| 14 | 115721 | Washer |
| 15 | 330291 | Bearing 60002ZP63LDS18 |
| 15* | 330945 | Bearing 6000 2RSL P63 LDS18SpA |
| 16 | 330471 | Circlip A26-1 |
| 18 | 330379 | O-ring 66X2B |
| 19 | 360409 | Screw M 5X12 8.8 |
| 20 | 152141 | Lock button |
| 21 | 115165 | Spring |
| 22 | 330342 | O-ring 6X2B |
| 23 | 152138 | Bearing bed |
| 24 | 330117 | Bearing 6202-2RS |
| 25 | 113091 | Spacer washer |
| 26 | 330472 | Circlip A35 |
| 26** | 330732 | Circlip A35-1D |
| 27 | 127633 | Body |
| 28 | 122938 | Diffuser |
| 29 | 152187 | Stator set |
| 30 | 152189 | Armature set |
| 31 | 121263 | Brush holder cover |
| 32 | 360646 | Screw 4x9.5 |
| 33 | 112242 | Brush holder set |
| 34 | 120964 | Brush with a switch |
| 35 | 120965 | Brush |
| 36 | 164934 | Rubber bush |
| 37 | 127544 | Capacitor |
| 38 | 112278 | Spring |
| 39 | 244946 | Claming pin |
| 40 | 100429 | Fan |
| 41 | 115147 | Protective washer |
| 42 | 330287 | Bearing 627-2ZP6LDS18 |
| 43 | 151992 | Casing handle set |
| 44 | 170663 | Switch KD10-RED |
| 45 | 256500 | Cord clamp |
| 46 | 360646 | Screw 4x9.5 |
| 47 | 360654 | Screw 4x18 |
| 48 | 121265 | Handle |
| 49 | 152929 | Back up disc washer |
| 50 | 121838 | Locking nut |
| 51 | 150015 | Special spanner 200 |
| 52 | 154561 | Disk guard 5" |
| 53 | 360816 | Nut M6 DIN 557 |
| 54 | 153038 | Bracket |
| 55 | 152727 | Gasket 6" |
| 56 | 360661 | Screw A1 M6x30 |
| 57 | 154562 | Disk guard set 5" |
| 201 | 154566 | Operating instruction |
| 202 | 169763 | Tool case |

Note: *-from 01.02.2007; **-from 01.02.2008
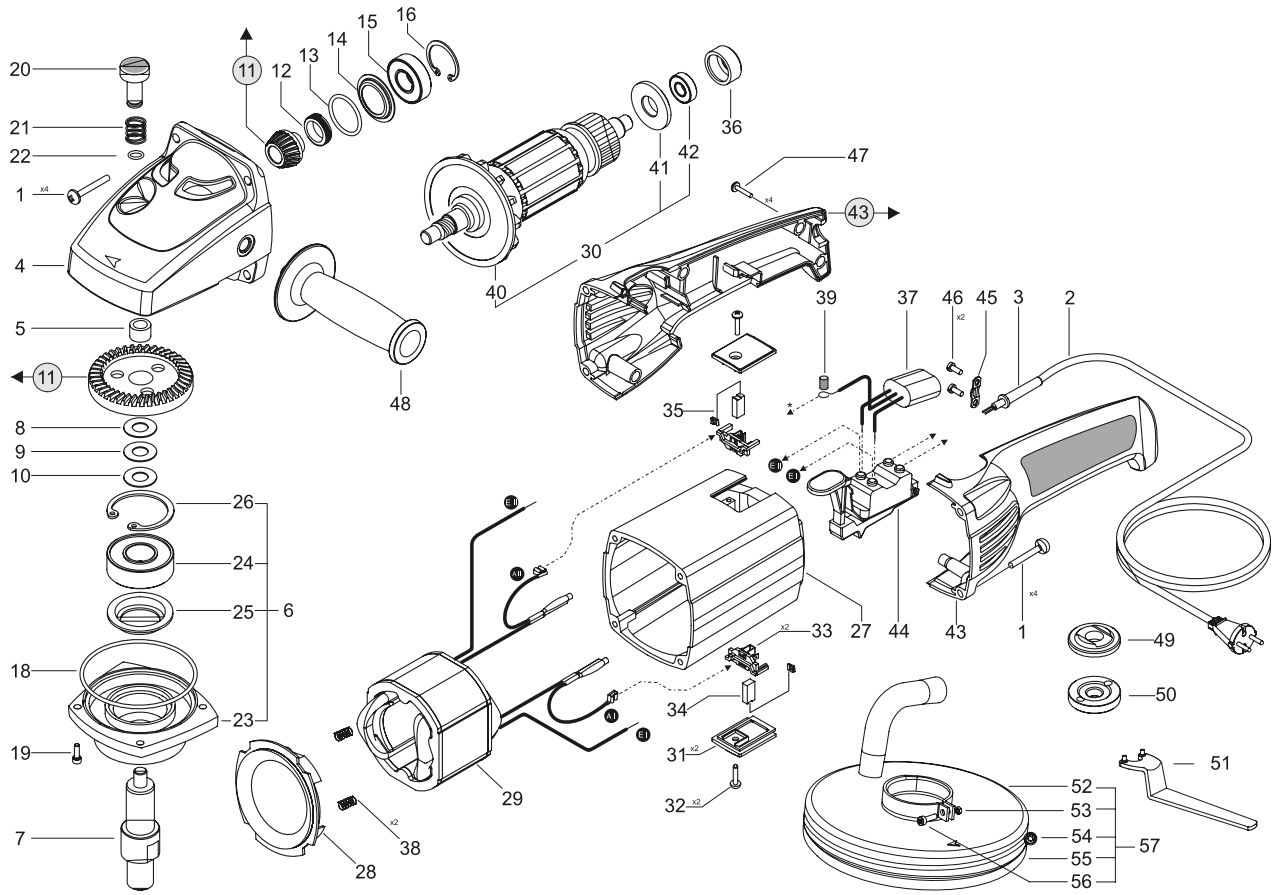
## FB 5