| POS. No. | Ref.No. | Description |
|---|---|---|
| 1 | 126964 | Circlip |
| 2 | 170063 | Releasing bush |
| 3 | 130767 | Ring |
| 4 | 330097 | Pellet 6,747-100 |
| 5 | 130769 | Spring |
| 6 | 360449 | Screw M4X40/20 8.8 |
| 7 | 360010 | Spring washer 4H |
| 8 | 154812 | Gear box set |
| 9 | 127034 | Bush |
| 10 | 126982 | Spacer washer |
| 11 | 330745 | Circlip B30-4B |
| 12 | 127035 | Spacer washer |
| 13 | 130731 | Spring |
| 14 | 126971 | Spindle gear |
| 15 | 126960 | Spindle |
| 16 | 126983 | Spacer washer |
| 17 | 151375 | Switching plate |
| 18 | 151374 | Switching plate |
| 19 | 151413 | Spring |
| 20 | 151376 | Locking panel |
| 21 | 126998 | Spring |
| 22 | 151377 | Spring |
| 23 | 150138 | Bearing |
| 24 | 150170 | Bearing shield |
| 25* | 330388 | O-ring 26x2B |
| 26 | 126996 | Gasket |
| 27 | 115431 | Spacer washer |
| 28 | 170071 | Switch knob |
| 29 | 330337 | O-ring 13x1.5 |
| 30 | 127005 | Spring |
| 31 | 170072 | Fixing bit |
| 32 | 330676 | O-ring 10x1.5 - FPM70 |
| 33 | 130735 | Medial mandrel |
| 34 | 126968 | Spacer washer |
| 35 | 126969 | Bush |
| 36 | 330677 | O-ring 9x3 - FPM90 |
| 37 | 330740 | Circlip A1-24 |
| 38 | 130739 | Piston |
| 39 | 330236 | O-RING 14X3C |
| 40 | 127036 | Cylinder |
| 41 | 128408 | Axle |
| 42 | 115221 | Spring 12x6,2x0,5 |
| 43 | 126987 | Spacer washer |
| 44 | 151379 | Spindle gear II for Gear shaft |
| 45 | 151373 | Bush |
| 46 | 151372 | Bush |
| 47 | 151378 | Gear shaft |
| 48 | 126994 | Rolling thrust bearing |
| 49** | 150145 | Large intermediate gear |
| 49*** | 154356 | Large intermediate gear |
| 50** | 151380 | Gear shaft complement |
| 50*** | 154357 | Gear shaft complement |
| 51** | 150502 | Bearing 8x16 |
| 51*** | 154126 | Bearing 8x16 |
| 52 | 330119 | Bearing HK0609 |
| 53 | 126997 | Axle |
| 54 | 150171 | Bearing shield set |
| 55 | 150144 | Bush |
| 56 | 330291 | Bearing 60002ZP63LDS18 |
| 57 | 121852 | Fan |
| 58 | 330287 | Bearing 627-2ZP6LDS18 |
| 59 | 151208 | Armature set |
| 60 | 164934 | Rubber bush |
| 61 | 129789 | Diffuser |
| 62 | 272960 | Claming pin |
| 63 | 120831 | Stator set |
| 64 | 173354 | Switch Defond DGQ 1112-HF |
| 65 | 151205 | Spacer washer |
| 66 | 128989 | Outlet |
| 67 | 116528 | Outlet |
| 68 | 127558 | Outlet |
| 69 | 116546 | Outlet |
| 70 | 116229 | Choke |
| 71 | 126917 | Brush holder set |
| 72 | 125052 | Brush with a switch |
| 73 | 125051 | Brush |
| 74 | 151225 | Body |
| 75 | 151204 | Casing handle set |
| 76 | 360648 | Screw 4x16 |
| 77 | 128006 | Insert |
| 78 | 127979 | Cord with a plug |
| 79 | 125053 | Cord protector |
| 80 | 256500 | Cord clamp |
| 81 | 360646 | Screw 4x9.5 |
| 82 | 160963 | Key holder |
| 83 | 121133 | Handle |
| 84 | 114032 | Nut M6 |
| 85 | 271221 | Plate |
| 86 | 121306 | Butterfly screw set |
| 87 | 121134 | Depth gauge |
| 88 | 121152 | Handle set |
| 89 | 127040 | Adapter for chuck |
| 90 | 118984 | Chuck B13L |
| 91 | 360582 | Screw M6LHX30-8.8 |
| 92 | 150137 | Spacer washer |
| 93 | 151203 | Electronic block |
| 201 | 170721 | Operating instruction |
| 202 | 164989 | Tool case |

Note: *- till 01.08.2002;**-till 01.07.2005; ***-from 01.07.2005
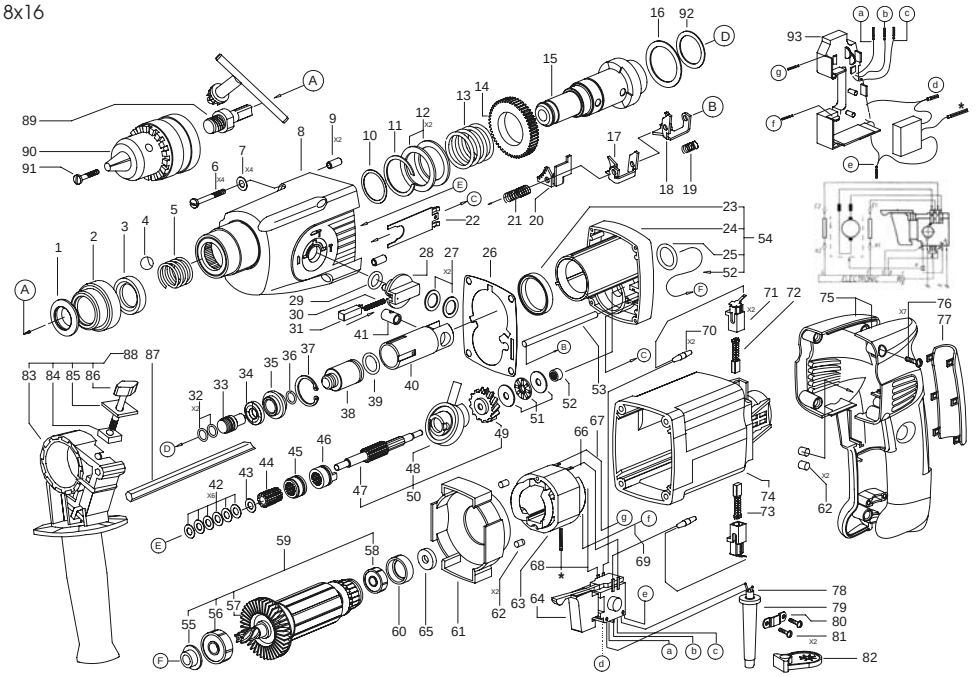
## BPR 241CE